HYDROGEN SAFETY SYSTEM

HY-GUARD® & HY-SIGHT™

H2scan®
Monitor. Manage. Momentum.

Integrated hydrogen safety system with real-time detection, alarms, visualization and facility-wide monitoring

A hydrogen area monitor system, HY-GUARD with self-calibration in standby power & energy storage battery applications automatically triggers ventilation, shutdown or alarm systems before an abnormality becomes an outage. Giving you earlier warning, long-term stability and confidence in your response.

ALWAYS ALERT

CONTINUOUS HYDROGEN MONITORING

Continuously monitors hydrogen in air and provides real-time concentration readings from HY-GUARD sensors.

LONG LIFE ACCURACY

REAL-TIME MEASUREMENT

Delivers accurate, real-time hydrogen measurement with fast response using self-calibration solid-state sensor technology with 10+ year service life.

WIRED TO RESPOND

RELAY OUTPUTS FOR SAFETY SYSTEMS

Configurable relay outputs drive ventilation, equipment shutdown, and other safety systems automatically, turning into immediate action.

PROACTIVE WARNING

VISIBLE AND AUDIBLE AT THE POINT OF RISK

Vibrant LEDs and display with audible alarm provide clear local alerting with integrated alarm managed on HY-SIGHT.

WORKS WITH YOUR SETUP

FULL SYSTEM INTEGRATION

Monitor and manage up to four HY-GUARD sensors from a single HY-SIGHT display for real-time visibility and control.

HISTORICAL DATA AVAILABLE 24/7

RELIABLE AND LOW MAINTENANCE

Infrastructure-grade safety runs uninterrupted without consumables, site visits or added workload, so operations keep moving.

Normal (Green)

Low Alarm (Yellow)

High Alarm (Red)

POWER & COMMUNICATION

- AC and/or DC Power Input
- 4-20 mA Analog Output
- Modbus RTU/RS-485 and Dry Contact

INSTALL ANYWHERE

However your battery cabinet or room is designed, **HY-GUARD** installs in minutes.

- PUNCH OUT
- JUNCTION BOX
- WALL MOUNT*
- DIN RAIL*
- SURFACE MOUNT*

* Requires additional universal adapter plate accessory.

H2scan brings situational intelligence to hydrogen-critical environments. Continuous monitoring, self-calibration and zero false alarms turn hydrogen data into operational confidence with fewer interruptions, less downtime, and more momentum.

HY-GUARD® & HY-SIGHT™

HY-SIGHT SPECIFICATIONS

Display	2.1", 480×480 IPS with rotary encoder
Sensors	Up to 4 HY-GUARD sensors
Speaker	Audible output for local indication
Communication	RS-485 (Modbus RTU), USB-C (Service)
Power Supply	AC: 85-264 VAC, 50/60 Hz DC: 12-48 VDC
Power	5 W Max
Operating Temp	3°C to 50°C (37°F to 122°F)
Storage Temp	-20°C to 60°C (-4°F to 140°F)
Mounting	Wall Mount, Junction Box, or Punch Out
Dimensions	5.1 x 5.1 x 3.1 in
Certifications	IEC 61010, CE, FCC Part 15, REACH, RoHS (all certifications pending)

HY-SIGHT DIMENSIONS

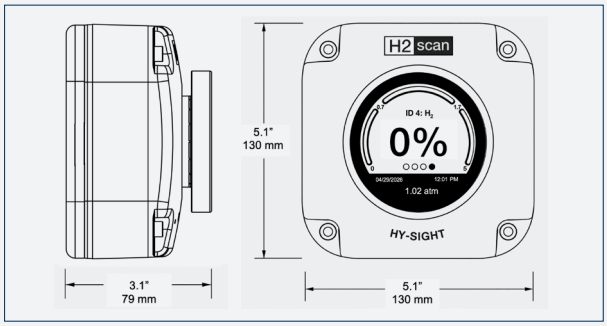

HY-GUARD PLACEMENT TOOL

Sensor placement with analysis and reports are available through H2scan's HY-GUARD Placement Tool to optimize coverage and system performance.

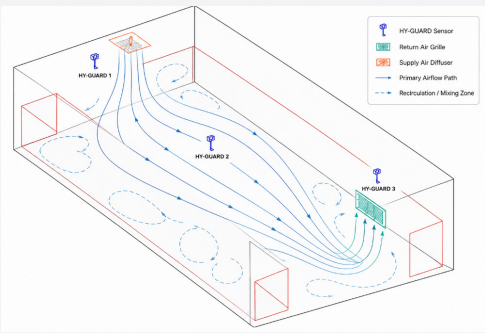

SYSTEM ARCHITECTURE WITH HY-SIGHT™

HY-SIGHT is the Modbus master and polls up to four (4) HY-GUARD sensors. Communication: Modbus over RS-485 (2-wire)

HY-GUARD SPECIFICATIONS

H_2 Range	0.4–5%
Accuracy[1]	±0.3% H_2 (Absolute Error)
Response Time[2]	30 seconds
Operational Temp	-25°C to 50°C (-13°F to 122°F)
Rated Temp	15°C to 40°C (59°F to 104°F)
Storage Temp	-40°C to 70°C (-40°F to 158°F)
Humidity	0–95% RH non-condensing
Connector Type	Relay 1%, Relay 2%, Fault, RS–485, 4–20 mA, AC & DC
Voltage	AC: 110–240 VAC DC: 15–60 VDC
Power	10 W Max
Communication	Analog Output: 4–20 nominal RS–485: Modbus two-wire
Dimensions	5.1 x 5.1 x 2.1 in
Buzzer	Audible output for local indication
Certifications	IEC 61010, CE, FCC Part 15, REACH, RoHS, UL 2075[3]

[1]Concentrations >2% have an accuracy of ±1%. Prolonged exposure to hydrogen concentrations >5% may damage the sensor
[2]Time to trigger first alarm when transitioning from air to 5% H_2
[3]UL 2075 certification pending

ALARM LEVELS

Alarm 1 (Low)	1.0% H_2
Alarm 2 (High)	2.0% H_2
Fault	Sensor / System Fault

DIMENSIONS

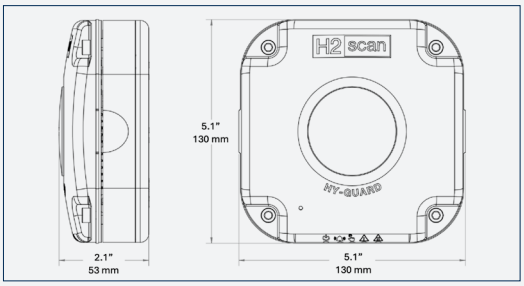

ORDERING INFORMATION

Description	Part Number
HY-GUARD	108111
HY-SIGHT	108250
4x HY-GUARD & HY-SIGHT	108412
Validation Shield Assy, HY-GUARD	50000201
H2scan Standard Bump Kit	105923-KIT
H2scan Standard Bump Kit Gas Replacement	105924-KIT
Universal Adapter Plate	108-KIT

Document Number 90000317, 10.26
© H2scan. All rights reserved. Specifications subject to change without notice

27215 Turnberry Lane, Unit A
Valencia, CA 91355, USA
+1 661-775-9575
hello@h2scan.com
www.h2scan.com