HYDROGEN SAFETY DISPLAY & CONTROLLER

HY-SIGHT™

H2scan®
Monitor. Manage. Momentum.

A scalable platform that displays and configures HY-GUARD® hydrogen sensors, providing real-time monitoring and alarm notifications

A hydrogen area monitor display and controller, HY-SIGHT continuously displays hydrogen and automatically triggers ventilation, shutdown or alarm systems before an abnormality becomes an outage. Giving you earlier warning, long-term stability and confidence in your response.

ALWAYS ALERT

CENTRALIZED MONITORING

View the status of all connected HY-GUARD sensors from a single intuitive, high-tech display.

SECOND BY SECOND

REAL-TIME MEASUREMENT

Monitor hydrogen levels, alarm conditions, pressure readings, and sensor status in real time.

WIRED TO RESPOND

RELAY OUTPUTS FOR SAFETY SYSTEMS

Provides visual and audible alarm indication with a configurable high alarm using the HY-GUARD.

PROACTIVE WARNING

VISIBLE AND AUDIBLE AT THE POINT OF RISK

Vibrant LEDs and display with audible alarm provide clear local alerting with integrated alarm managed on HY-SIGHT.

WORKS WITH YOUR SETUP

FULL SYSTEM INTEGRATION

Monitor and manage up to four HY-GUARD sensors from a single HY-SIGHT display for real-time visibility and control.

HISTORICAL DATA AVAILABLE 24/7

DATA AND EVENT MANAGEMENT

Download historical data and event logs for reporting, analysis and compliance documentation.

Normal (Green)

Low Alarm (Yellow)

High Alarm (Red)

Fault (Blue)

H2scan brings situational intelligence to hydrogen-critical environments. Continuous monitoring, self-calibration and zero false alarms turn hydrogen data into operational confidence with fewer interruptions, less downtime, and more momentum.

HYDROGEN SAFETY DISPLAY & CONTROLLER

HY-SIGHT™

HY-SIGHT is a centralized hydrogen monitoring and control platform that connects multiple HY-GUARD sensors through a single, intuitive interface. Monitor live hydrogen concentrations, receive configurable alarm notifications, review historical trends, and manage connected devices from one display. Designed for battery rooms, energy storage systems, and other critical infrastructure, HY-SIGHT simplifies hydrogen safety while integrating seamlessly with existing facility management systems.

HY-SIGHT SPECIFICATIONS

Display	2.1", 480×480 IPS with rotary encoder
Sensors	Up to 4 HY-GUARD sensors
Speaker	Audible output for local indication
Communication	RS-485 (Modbus RTU), USB-C (Service)
Power Supply	AC: 85-264 VAC, 50/60 Hz DC: 12-48 VDC
Power	5 W Max
Operating Temp	3°C to 50°C (37°F to 122°F)
Storage Temp	-20°C to 60°C (-4°F to 140°F)
Mounting	Wall Mount, Junction Box, or Punch Out
Dimensions	5.1 x 5.1 x 3.1 in
Certifications	IEC 61010, CE, FCC Part 15, REACH, RoHS (all certifications pending)

SYSTEM ARCHITECTURE WITH HY-SIGHT™

HY-SIGHT is the Modbus master and polls up to four (4) HY-GUARD sensors. Communication: Modbus over RS-485 (2-wire)

SYSTEM HIGHLIGHTS

- REAL-TIME HYDROGEN MONITORING
- CONFIGURABLE HIGH ALARM
- DATA LOGGING & HISTORICAL TRENDS
- MODBUS RTU COMMUNICATION
- USER-FRIENDLY DISPLAY & CONTROLS
- SEAMLESS FACILITY INTEGRATION

ALARM LEVELS

Alarm 1 (Low)	1.0% H_2
Alarm 2 (High)	2.0% H_2
Fault	Sensor / System Fault

HY-SIGHT DIMENSIONS

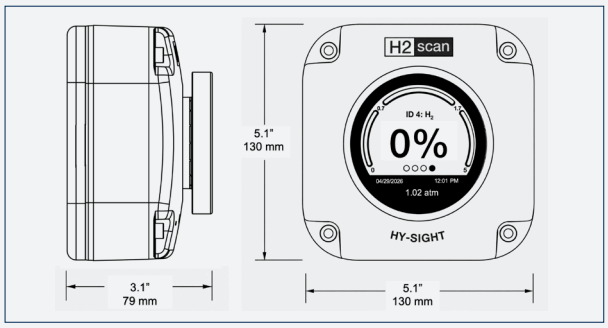

ORDERING INFORMATION

Description	Part Number
HY-GUARD	108111
HY-GUARD RS	108350
HY-SIGHT	108250
4x HY-GUARD & HY-SIGHT	108412
Validation Shield Assy, HY-GUARD	50000201
H2scan Standard Bump Kit	105923-KIT
H2scan Standard Bump Kit Gas Replacement	105924-KIT
Universal Adapter Plate	108-KIT

Document Number 90000309 10.26
© H2scan. All rights reserved. Specifications subject to change without notice

27215 Turnberry Lane, Unit A
Valencia, CA 91355, USA
+1 661-775-9575
hello@h2scan.com
www.h2scan.com